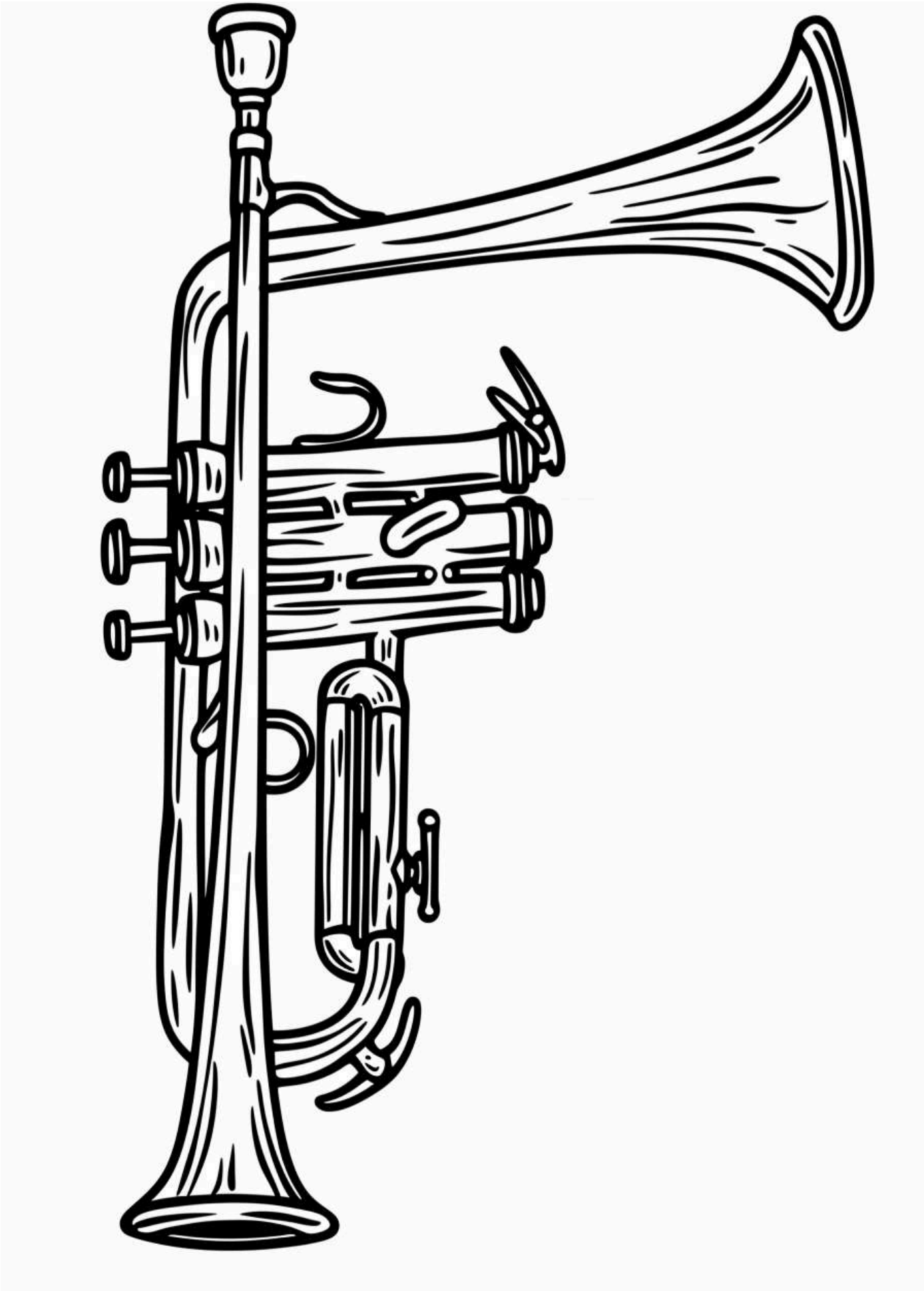

ColoringSheetsForKids.com

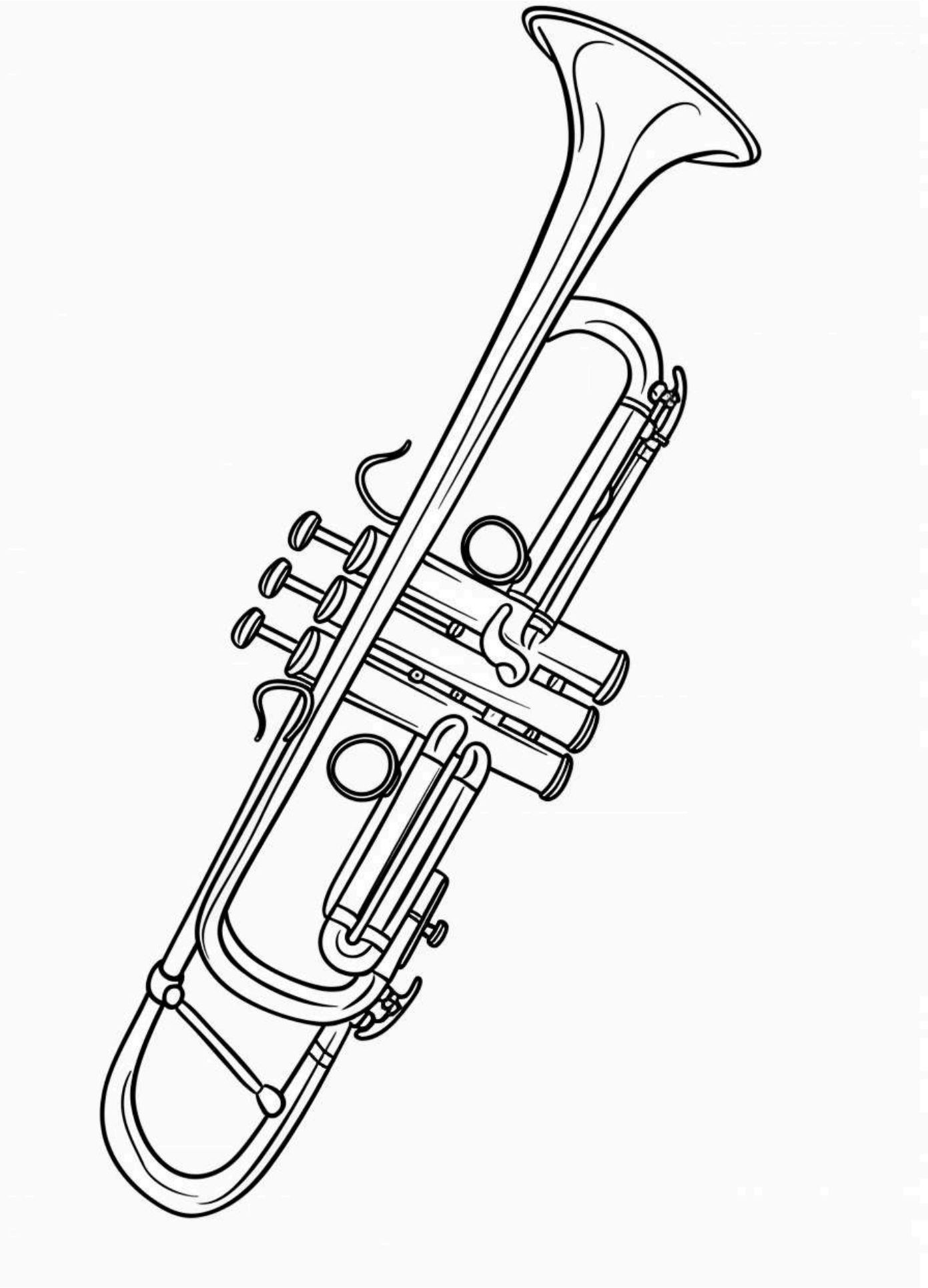

ColoringSheetsForKids.com

ColoringSheetsForKids.com

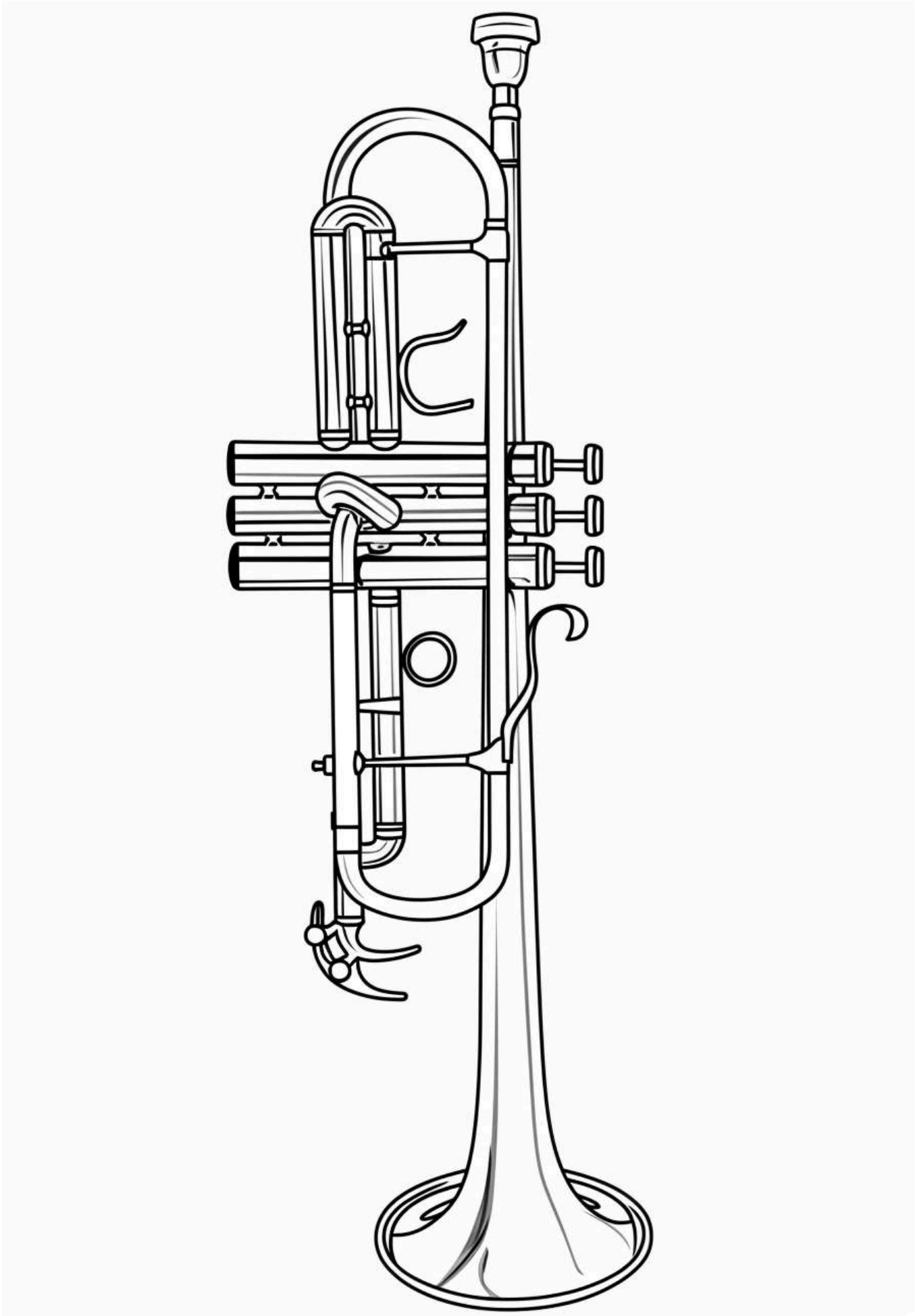

ColoringSheetsForKids.com

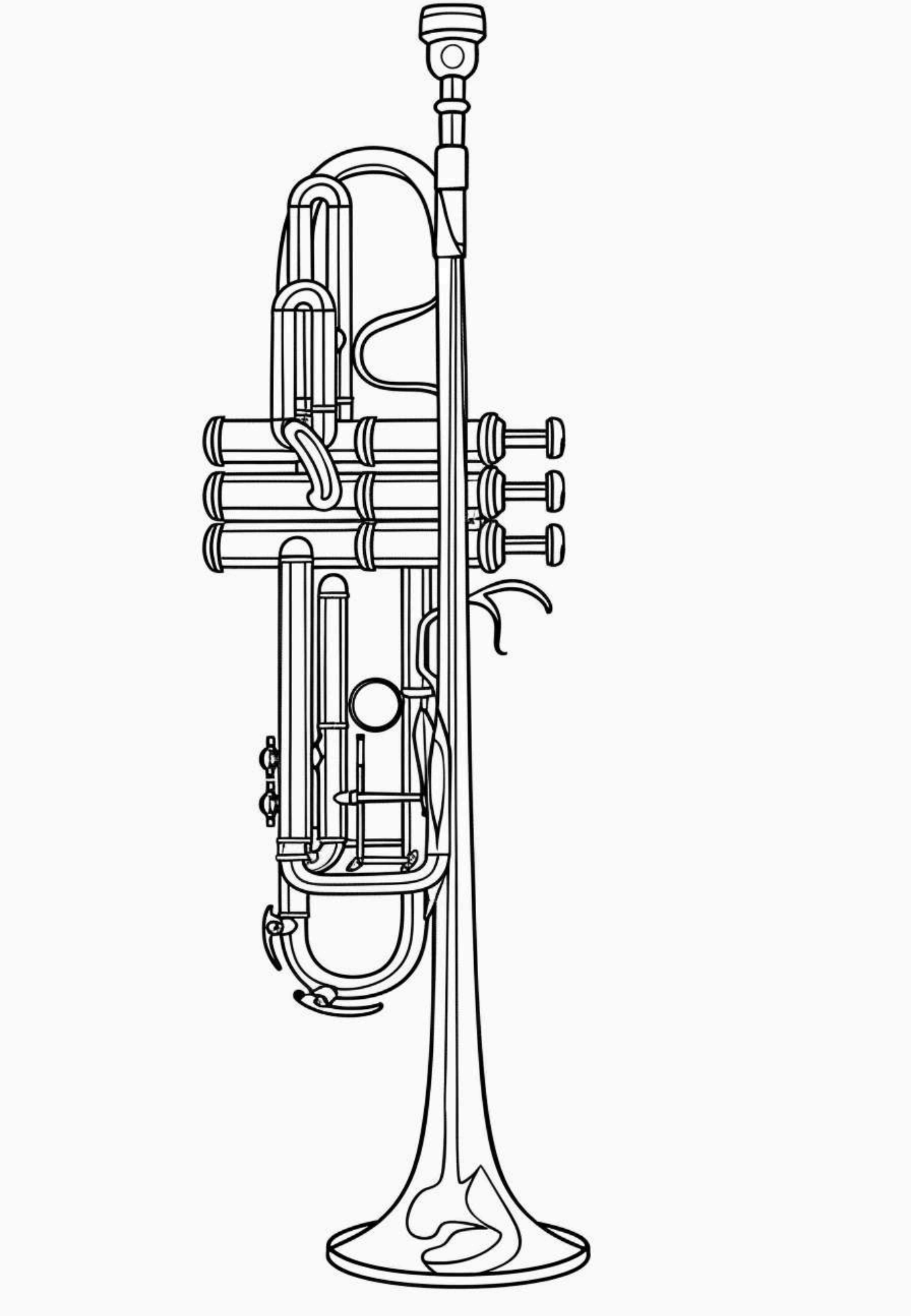

ColoringSheetsForKids.com

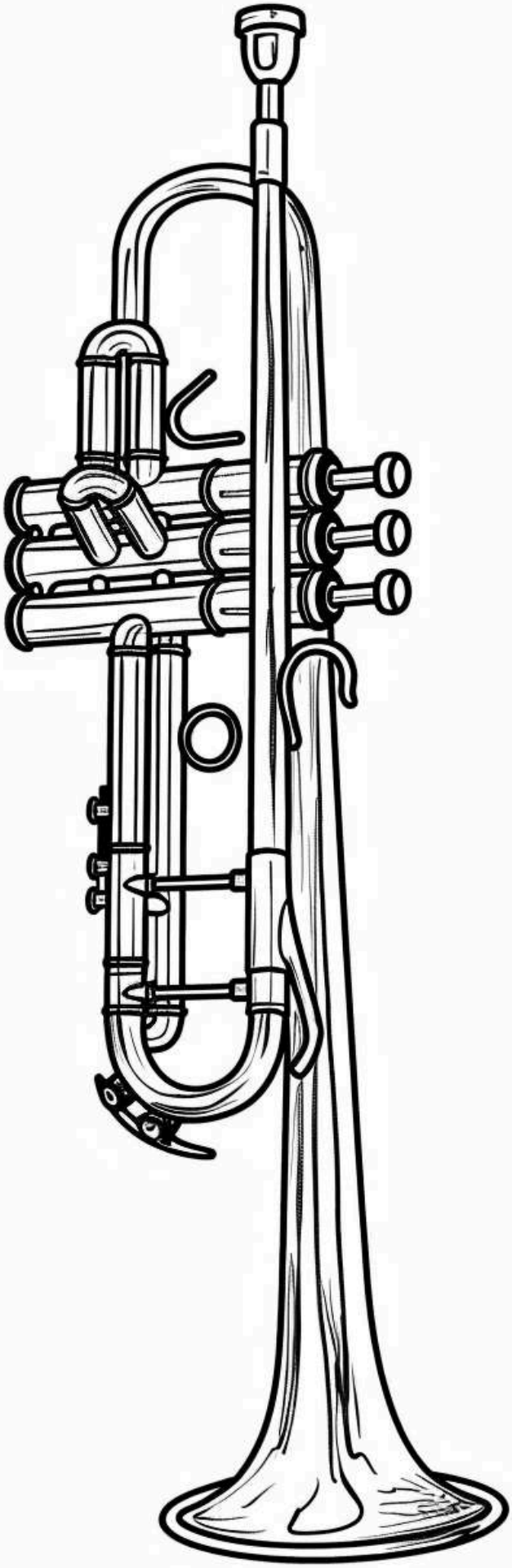

ColoringSheetsForKids.com

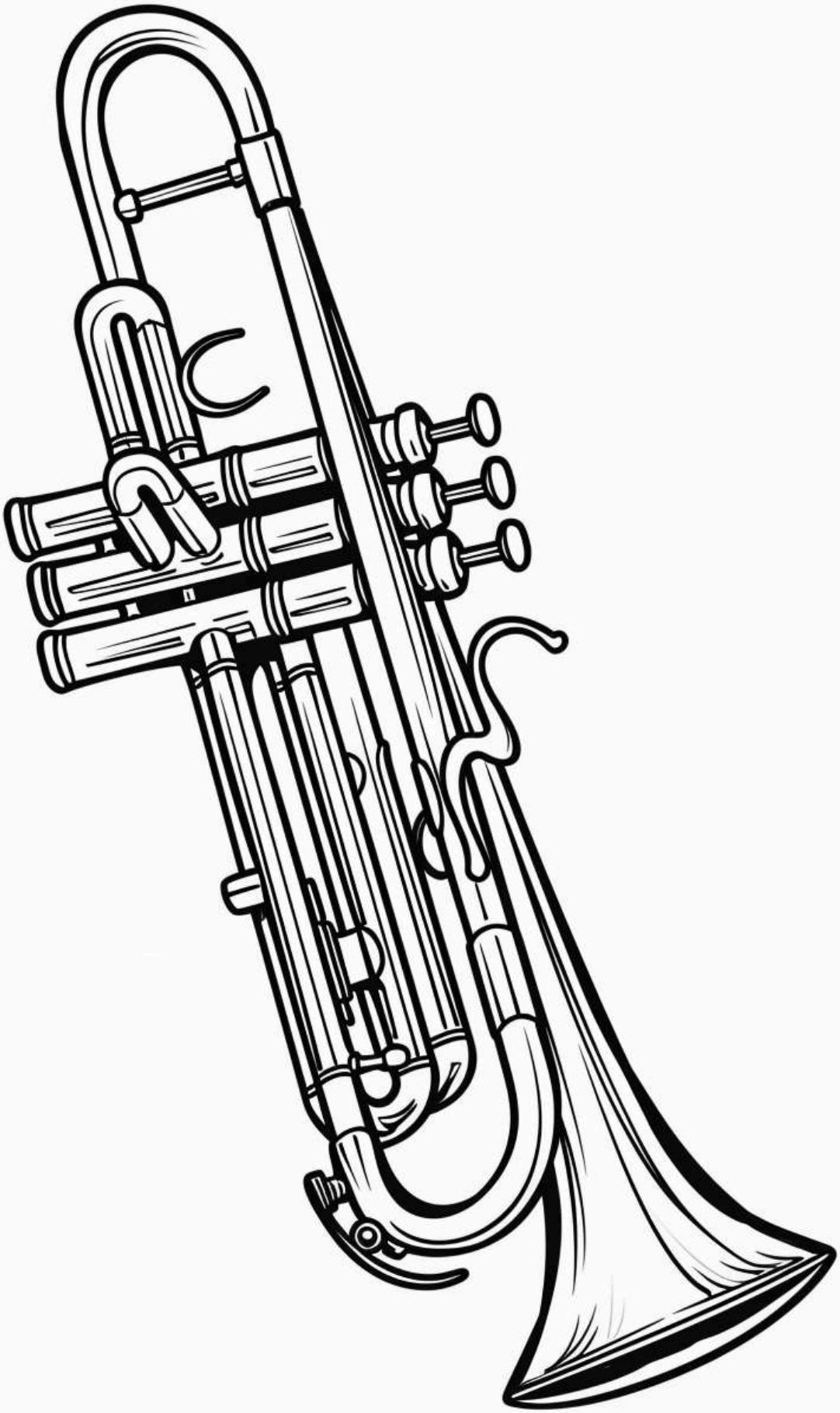

ColoringSheetsForKids.com

ColoringSheetsForKids.com

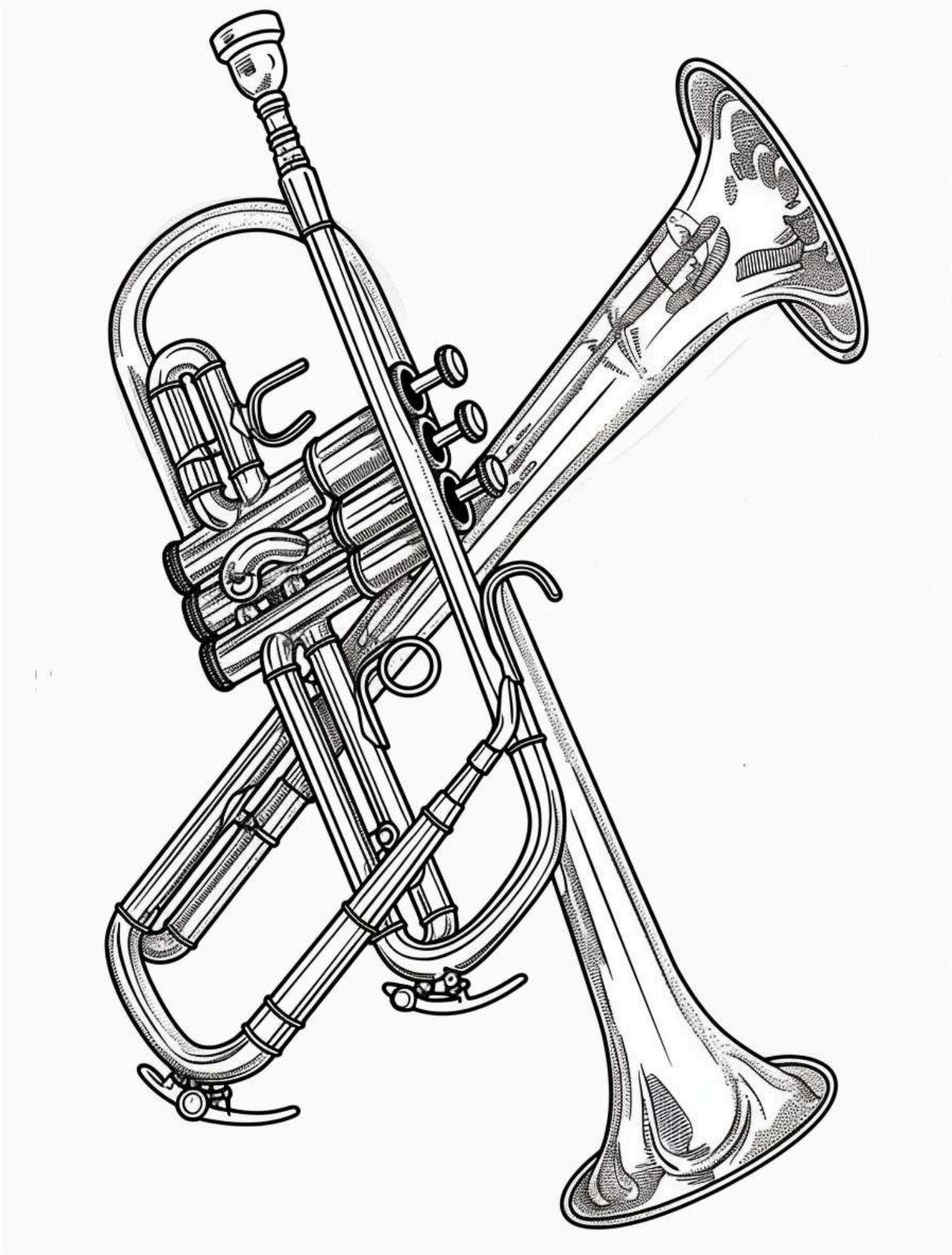

ColoringSheetsForKids.com

ColoringSheetsForKids.com

ColoringSheetsForKids.com

ColoringSheetsForKids.com